TNT100L-BTC3

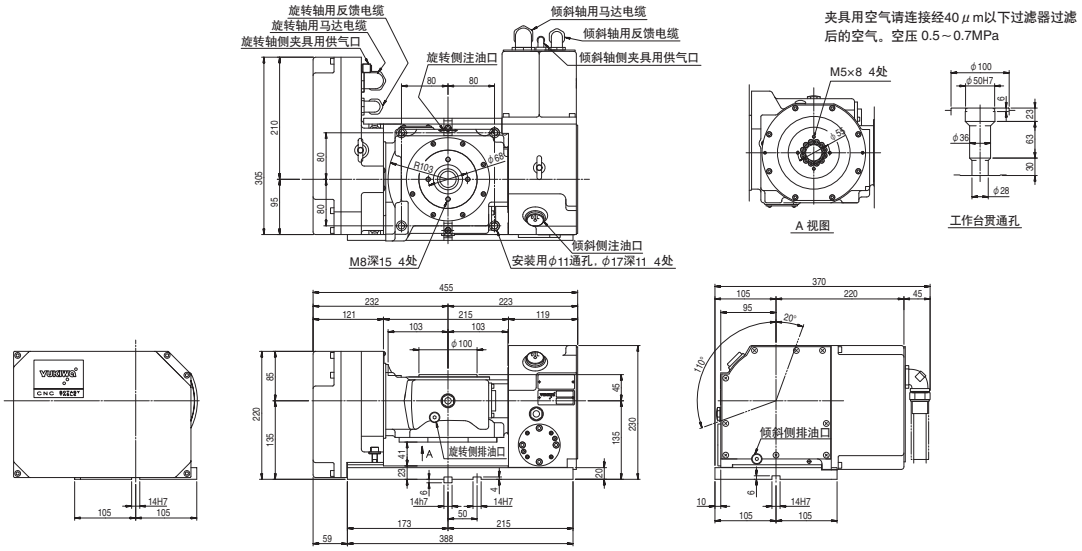

TNT100L-BTC6/BTC7/BTC8/BTC9/BTC1A

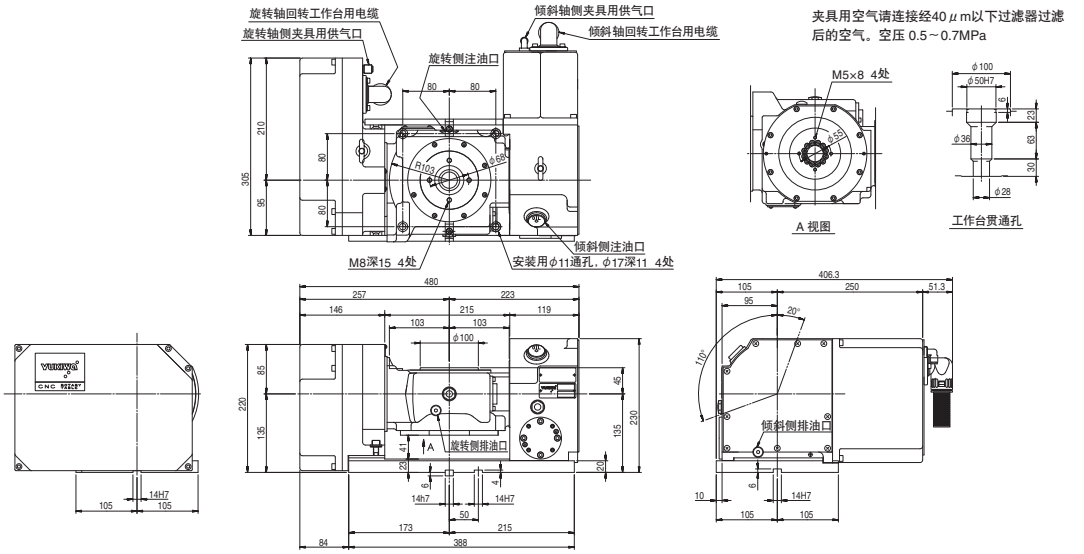

TNT100L-BQT6/BQT9

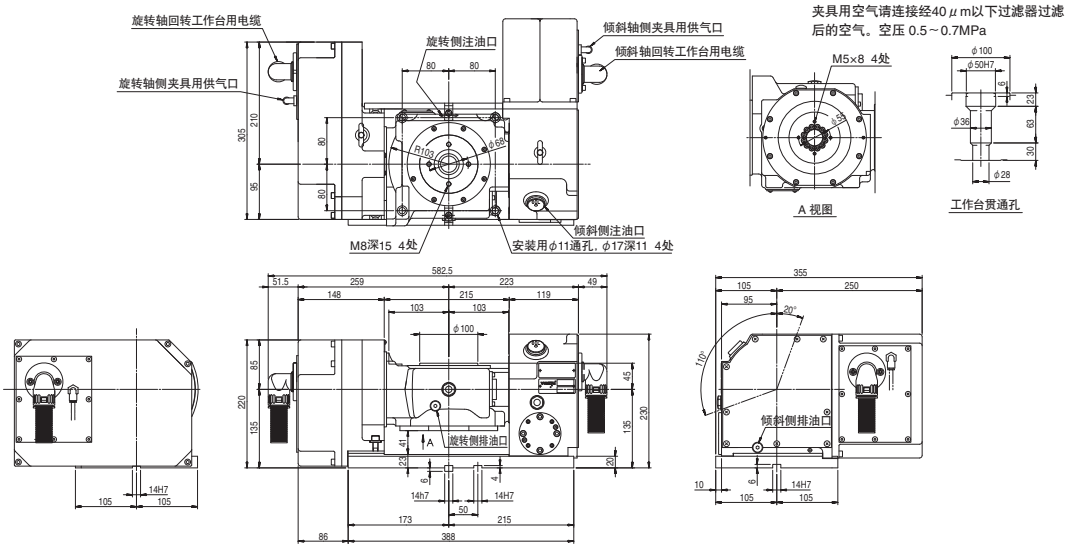

TNT130L-BTC3

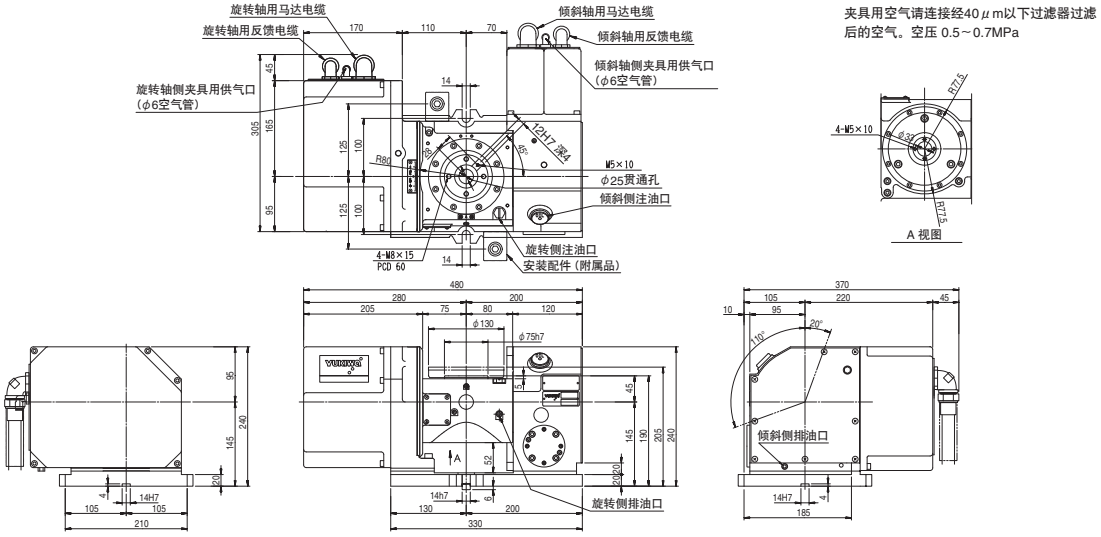

TNT130L-BTC6/BTC7/BTC8/BTC9/BTC1A

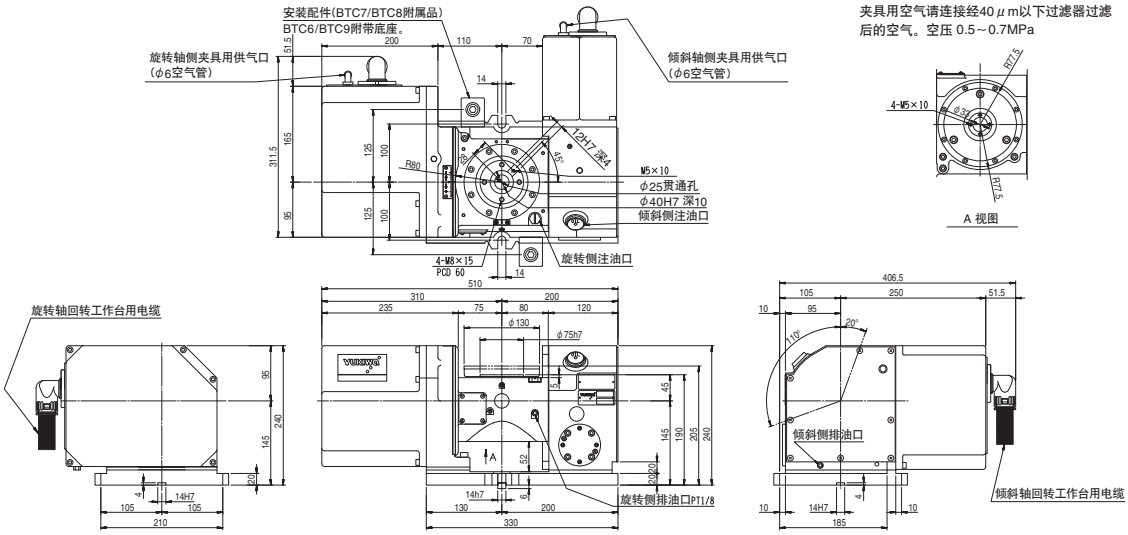

TNT130L-BQT4-1

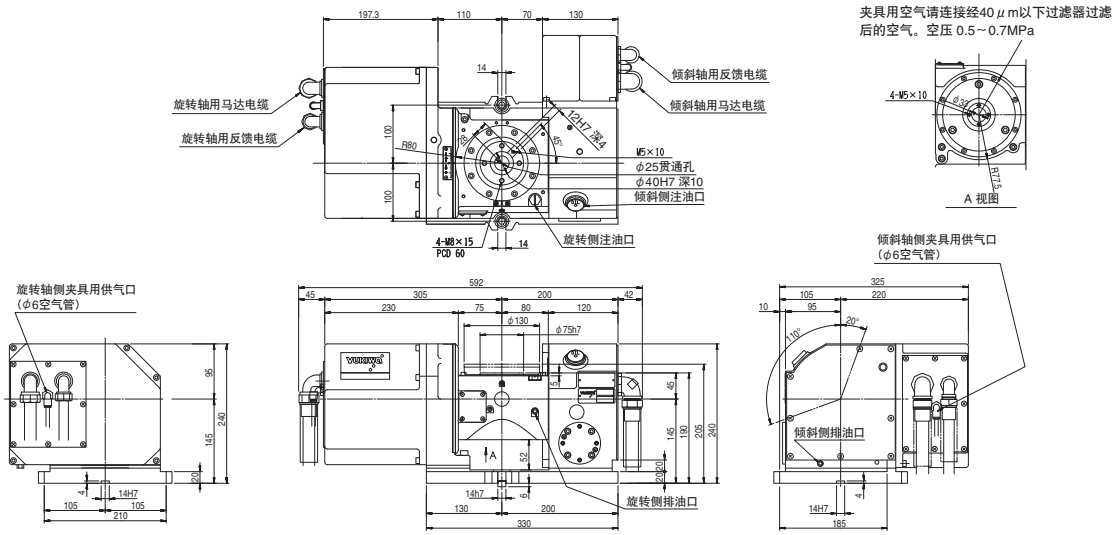

TNT130L-BQT6/BQT9/BQT1B

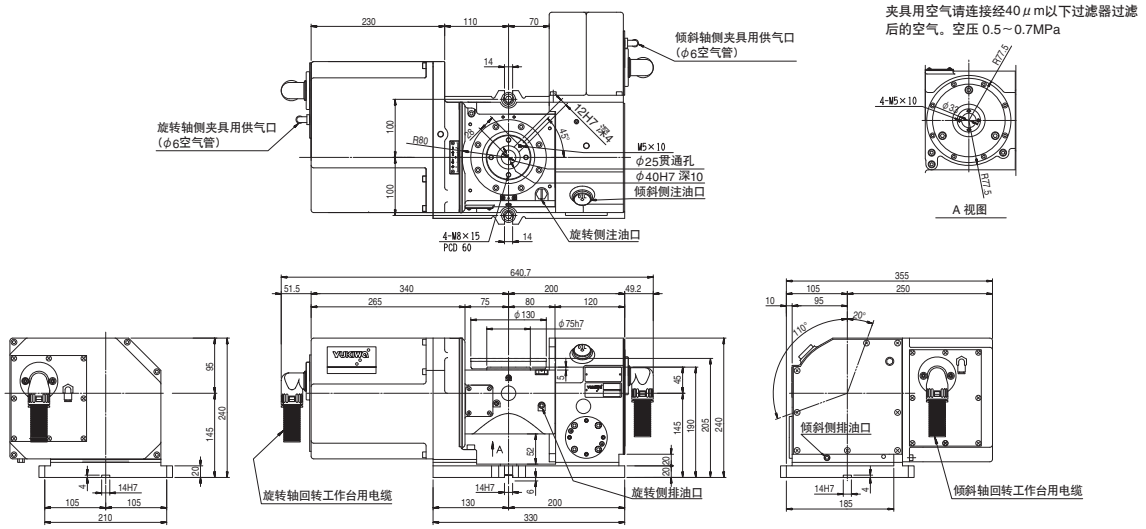

TNT180L-BTC36/BTC37/BTC39/BTC3A

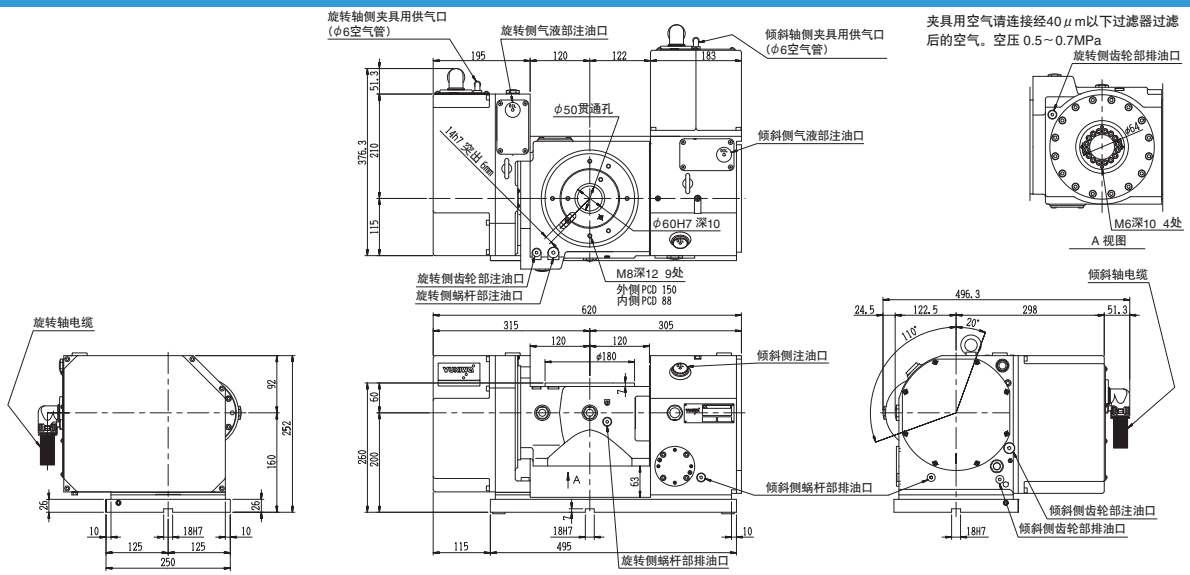

TNT180L-BQT36/BQT39

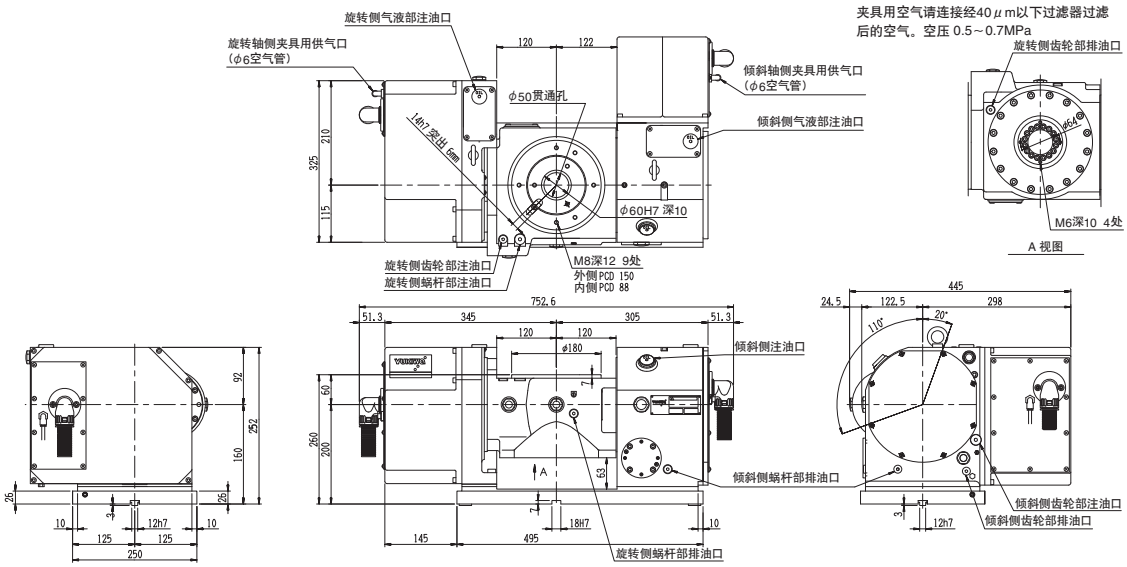

TRB(H)140L-BTC3/BTC6/BTC7/BTC9

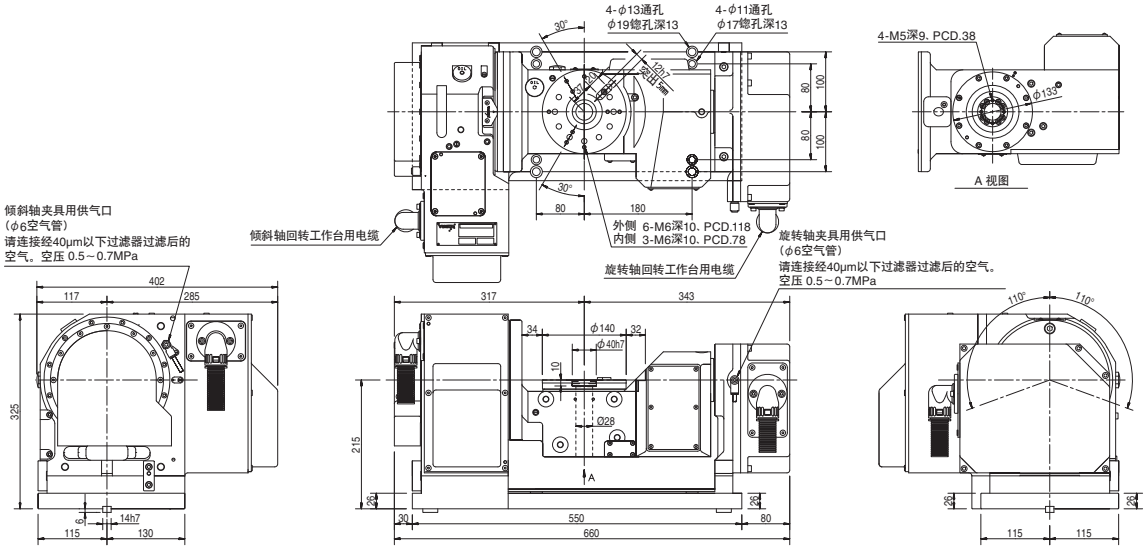

TRB(H)140L-BTC8/BTC1A

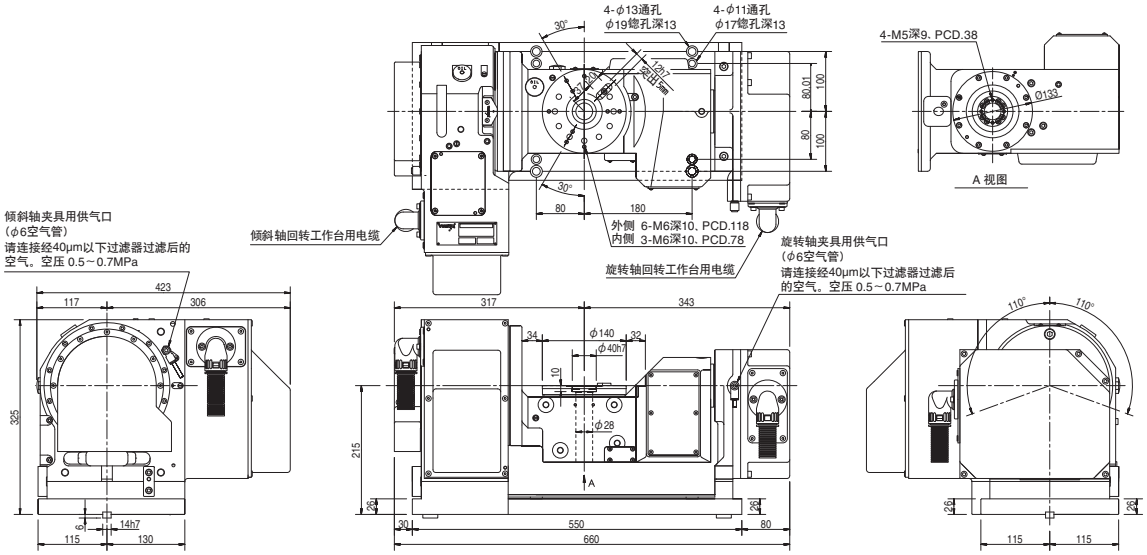
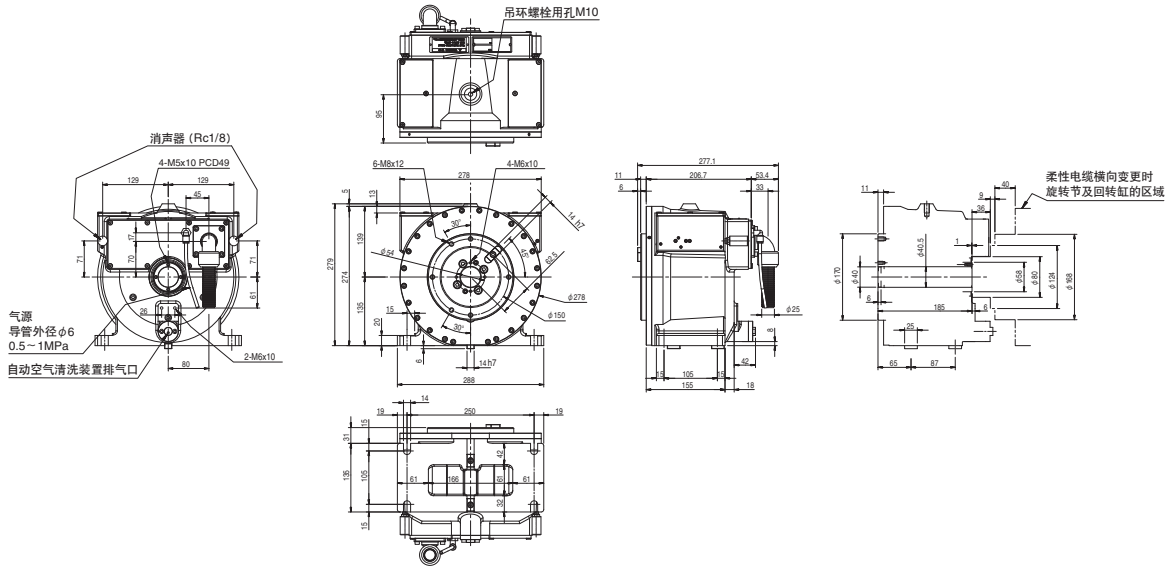
DRA170-BTC36/BTC37/BTC39/BQT36/BQT39